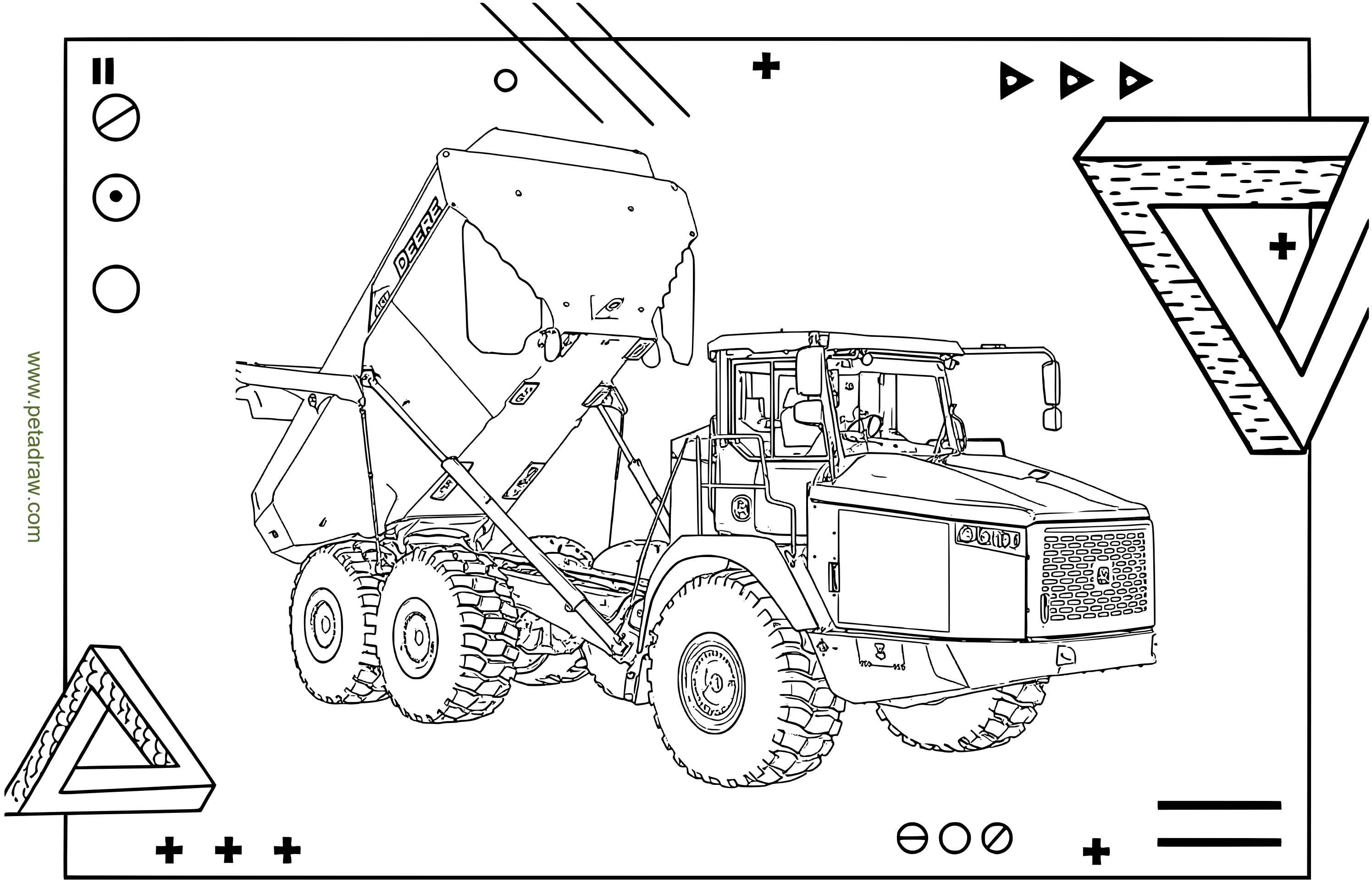


www.petadraw.com